GRBL-TTLserialToParallel1

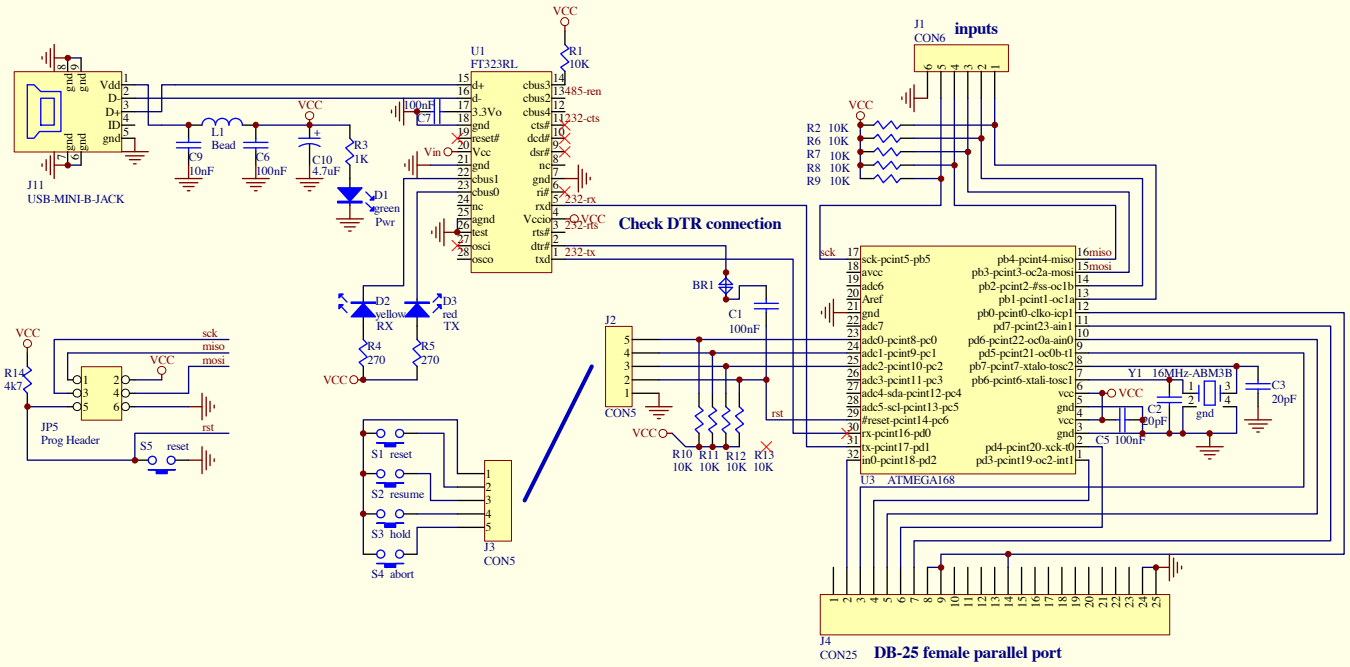

Title		
Size: B	Number	Revision
Date: 23-Sep-2014	Sheet of	
File: R:\Data\PROJECT\USB-parallel\PCB\GRBL-TTLserialToParallel1.ddb		

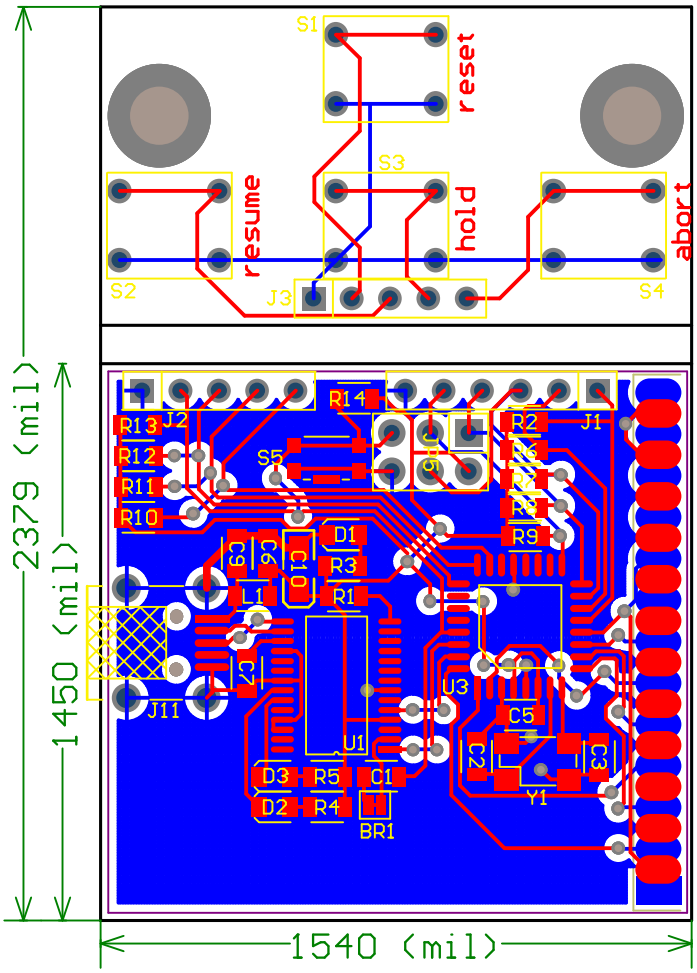

S1
reset
S3
resume
hold
abort
S2
J3
S4
R14
R13
J2
R12
R11
R10
S5
R2
J1
R9
D1
R3
R1
C9
C6
C10
L1
C7
J11
U3
C5
U1
C2
C3
Y1
D3
R5
C1
D2
R4
BR1
2379 (mil)
1450 (mil)
1540 (mil)

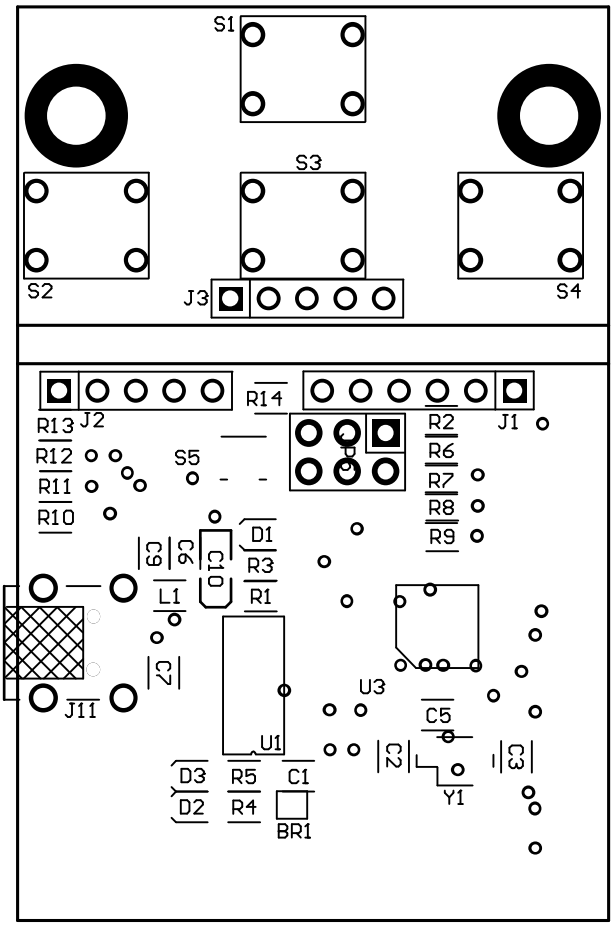
S1
S3
S2
J3
S4
R14
J2
R13
R12
R11
R10
S5
R2
R6
R7
R8
R9
J1
D1
R3
R1
C9
C6
C10
L1
C7
J11
U3
C5
U1
C2
C3
Y1
D3
D2
R5
R4
C1
BR1
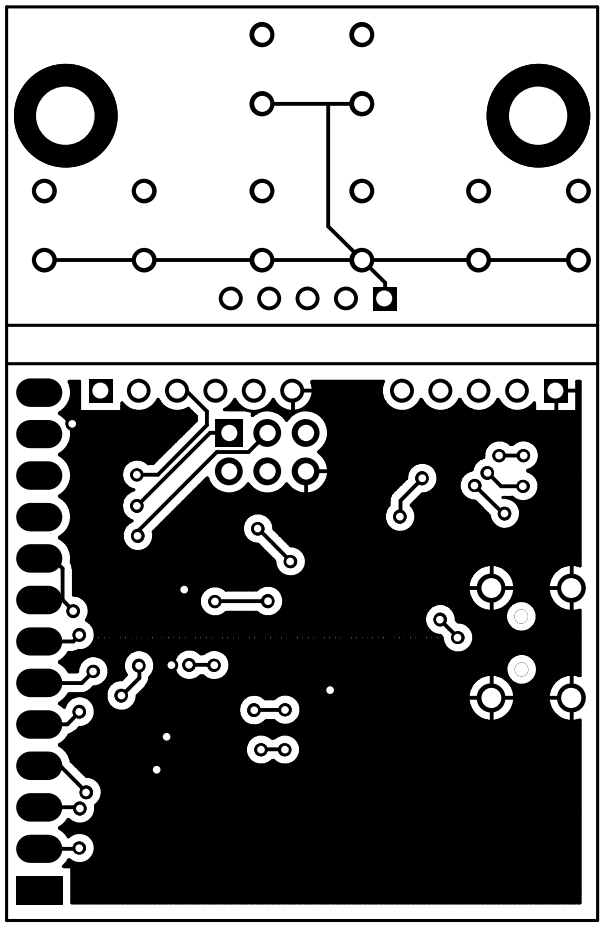
reset
resume
hold
abort